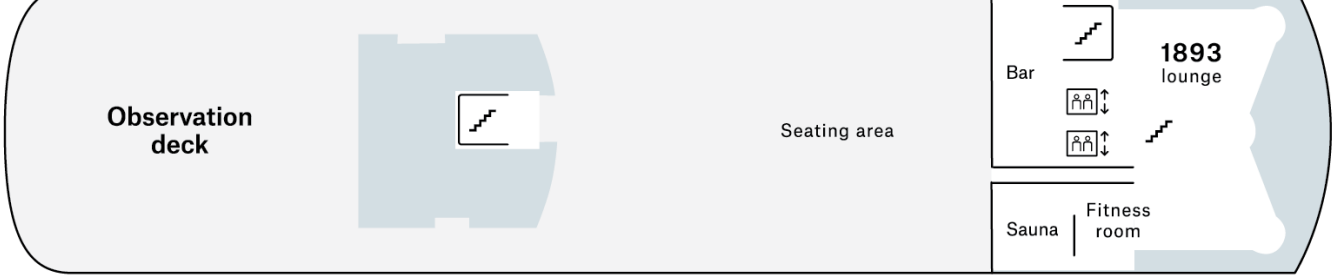
Observation deck
Seating area
Bar
1893 lounge
Sauna
Fitness room

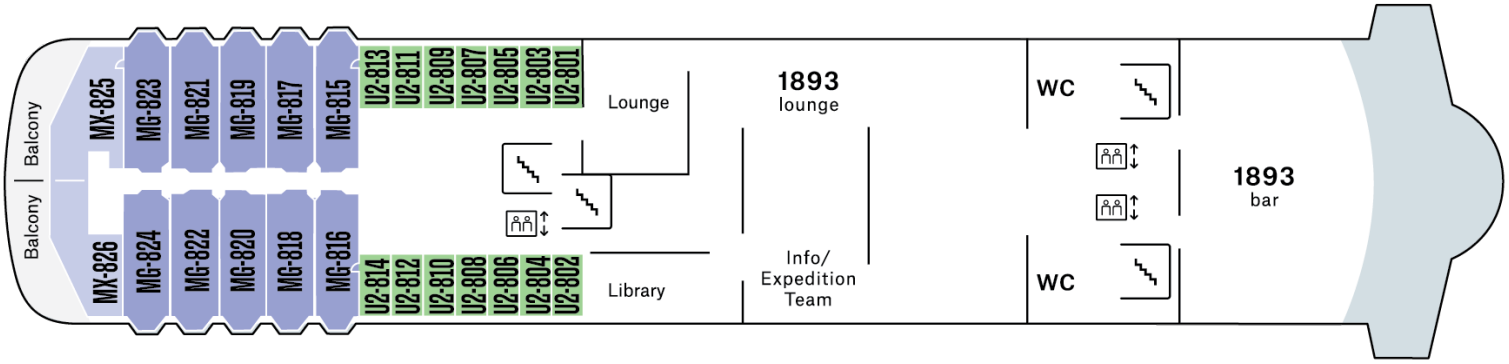
Balcony
Balcony
MX-825
MG-823
MG-821
MG-819
MG-817
MG-815
MX-826
MG-824
MG-822
MG-820
MG-818
MG-816
U2-813 U2-811 U2-809 U2-807 U2-805 U2-803 U2-801
U2-814 U2-812 U2-810 U2-808 U2-806 U2-804 U2-802
Lounge
Library
1893 lounge
Info/ Expedition Team
WC
WC
1893 bar

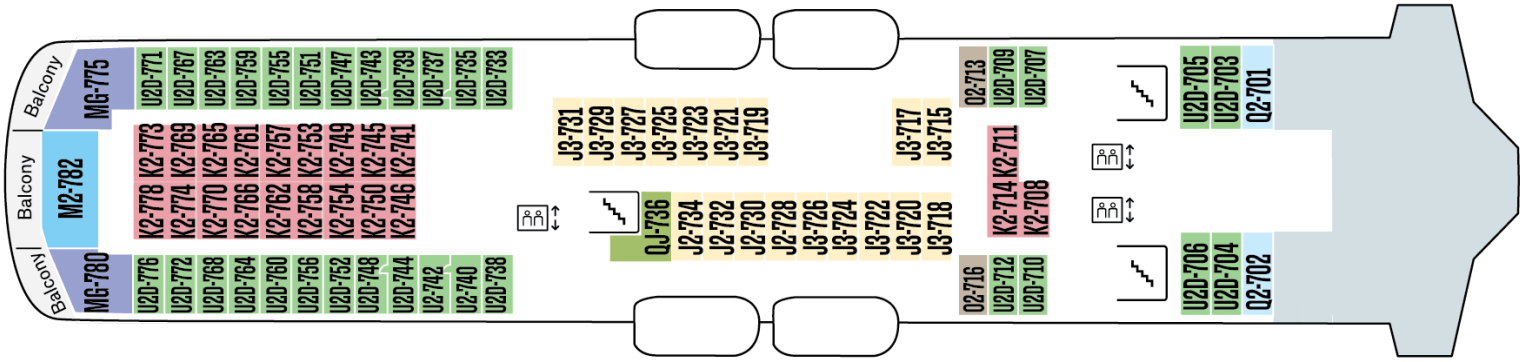
Balcony
Balcony
Balcony
MG-775
M2-782
MG-780
U2D-771 U2D-767 U2D-763 U2D-759 U2D-755 U2D-751 U2D-747 U2D-743 U2D-739 U2D-737 U2D-735 U2D-733
K2-773 K2-769 K2-765 K2-761 K2-757 K2-753 K2-749 K2-745 K2-741
K2-778 K2-774 K2-770 K2-766 K2-762 K2-758 K2-754 K2-750 K2-746
U2D-776 U2D-772 U2D-768 U2D-764 U2D-760 U2D-756 U2D-752 U2D-748 U2D-744 U2-742 U2-740 U2D-738
J3-731 J3-729 J3-727 J3-725 J3-723 J3-721 J3-719
QJ-736
J2-734 J2-732 J2-730 J2-728 J3-726 J3-724 J3-722 J3-720 J3-718
J3-717 J3-715
K2-714 K2-711
K2-708
O2-713 U2D-709 U2D-707
O2-716 U2D-712 U2D-710
U2D-705 U2D-703 O2-701
U2D-706 U2D-704 O2-702

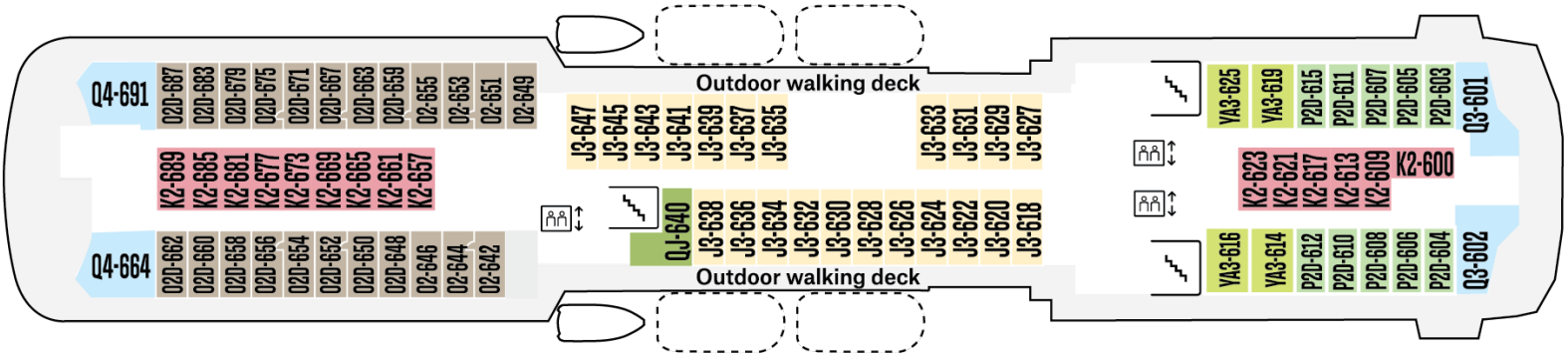
Q4-691
O2D-687 O2D-683 O2D-679 O2D-675 O2D-671 O2D-667 O2D-663 O2D-659 O2-655 O2-653 O2-651 O2-649
K2-689 K2-685 K2-681 K2-677 K2-673 K2-669 K2-665 K2-661 K2-657
Q4-664
O2D-662 O2D-660 O2D-658 O2D-656 O2D-654 O2D-652 O2D-650 O2D-648 O2-646 O2-644 O2-642
Outdoor walking deck
J3-647 J3-645 J3-643 J3-641 J3-639 J3-637 J3-635
QJ-640
J3-638 J3-636 J3-634 J3-632 J3-630 J3-628 J3-626 J3-624 J3-622 J3-620 J3-618
J3-633 J3-631 J3-629 J3-627
Outdoor walking deck
YA3-625 YA3-619 P2D-615 P2D-611 P2D-607 P2D-605 P2D-603 Q3-601
K2-623 K2-621 K2-617 K2-613 K2-609 K2-600
YA3-616 YA3-614 P2D-612 P2D-610 P2D-608 P2D-606 P2D-604 Q3-602

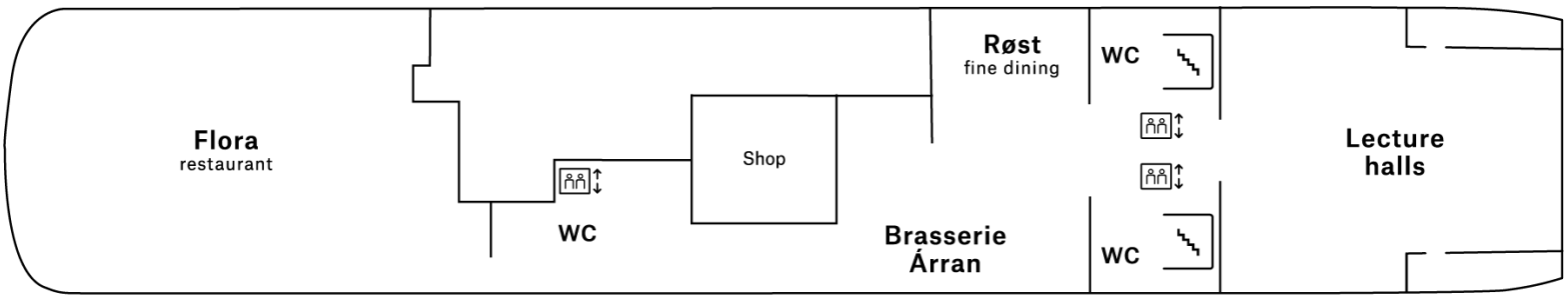
Flora
restaurant
WC
Shop
Brasserie Árran
Røst
fine dining
WC
WC
Lecture halls

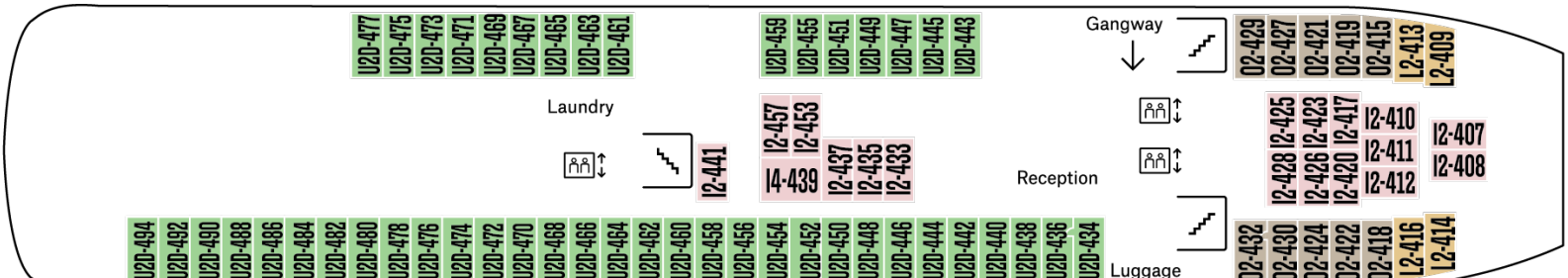
U2D-477 U2D-475 U2D-473 U2D-471 U2D-469 U2D-467 U2D-465 U2D-463 U2D-461
U2D-459 U2D-455 U2D-451 U2D-449 U2D-447 U2D-445 U2D-443
Gangway
O2-429 O2-427 O2-421 O2-419 O2-415
L2-413 L2-409
Laundry
I2-441
I2-457 I2-453
I4-439
I2-437 I2-435 I2-433
Reception
I2-428 I2-425
I2-426 I2-423
I2-420 I2-417
I2-410
I2-411
I2-412
I2-407
I2-408
U2D-494 U2D-492 U2D-490 U2D-488 U2D-486 U2D-484 U2D-482 U2D-480 U2D-478 U2D-476 U2D-474 U2D-472 U2D-470 U2D-468 U2D-466 U2D-464 U2D-462 U2D-460 U2D-458 U2D-456 U2D-454 U2D-452 U2D-450 U2D-448 U2D-446 U2D-444 U2D-442 U2D-440 U2D-438 U2D-436 U2D-434
Luggage
O2-432 O2-430 O2-424 O2-422 O2-418
L2-416 L2-414